DESIGN REQUIREMENTS OF MODERN ENGINE CONTROL SYSTEM

- Speed / Accuracy / Ease of Control (Least Aircrew Workloads)
- Wide Operational Range
- Reliability & Operational Safety
- Low Operating & Maintenance Costs
- Should Not Add Weight
- Fuel Efficiency
- Dependable Starts

FADEC : FUNCTIONS

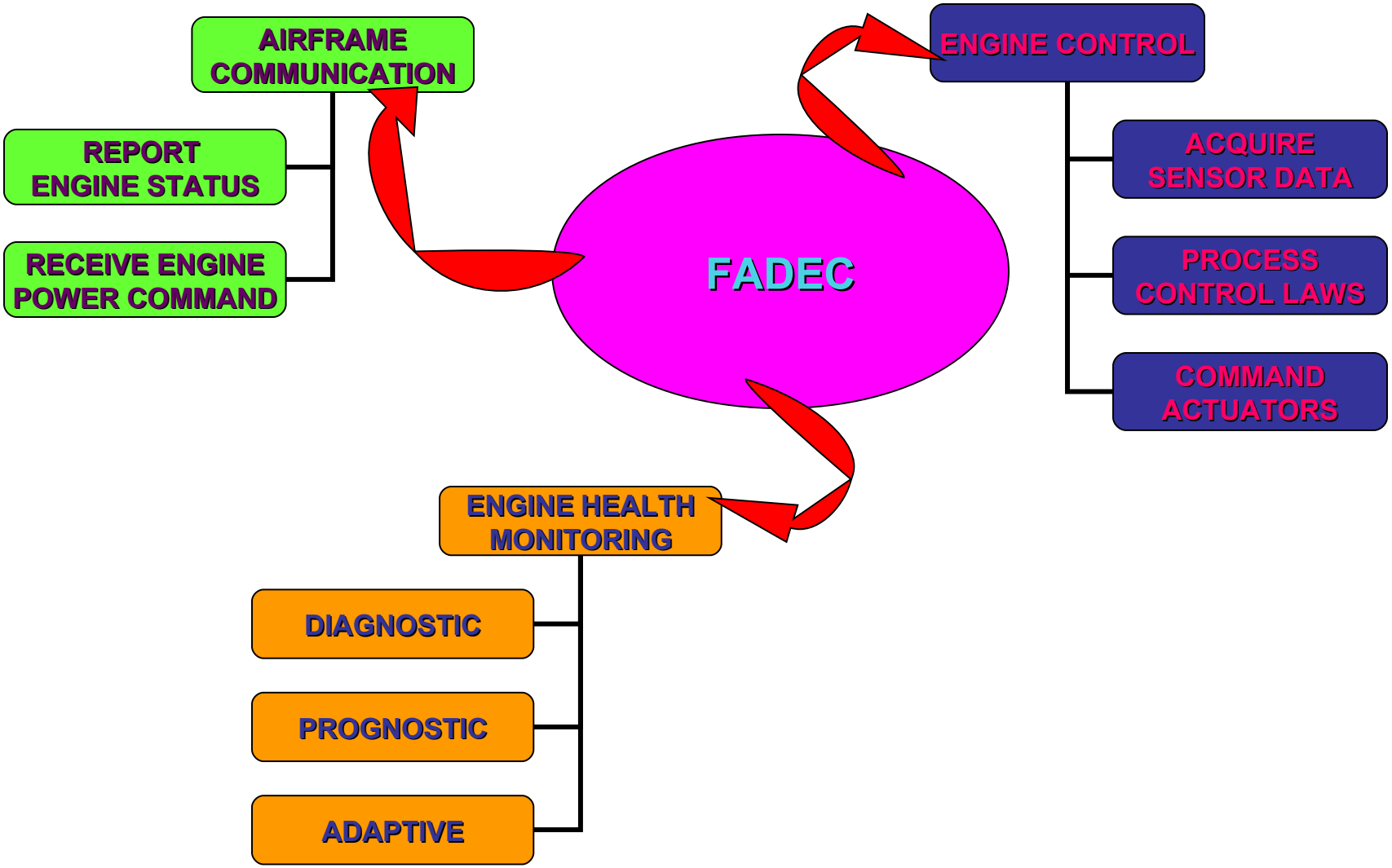

FADEC : INFRASTRUCTURE

CONTROL OPERATIONS IN GAS TURBINE ENGINES

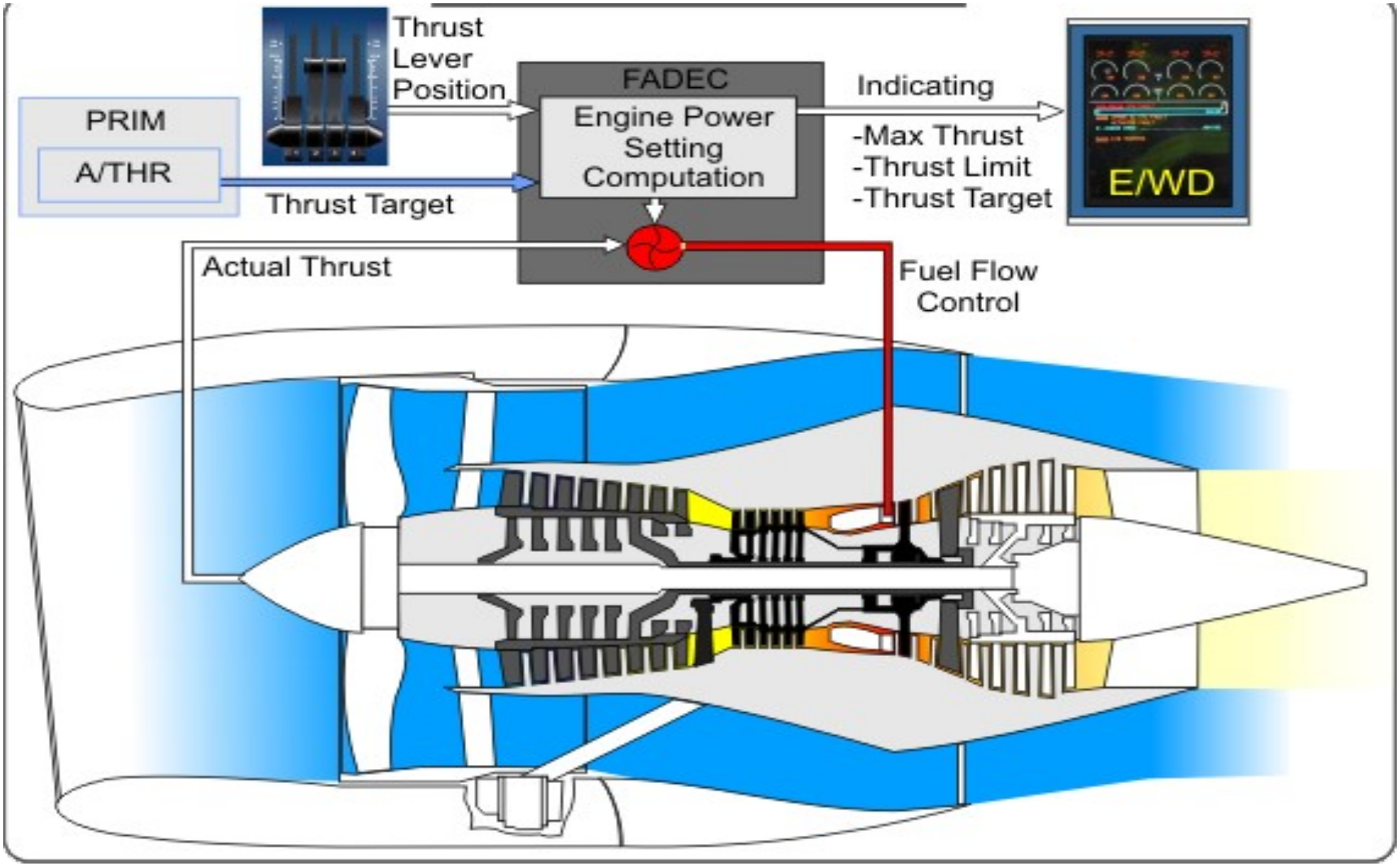

CONTROL OPERATIONS IN GAS TURBINE ENGINES

- **Air Control** (Compressor Entry)
- **Fuel Control** (Main / AB / Starting System)
- **Ignition Control**
- **Starting Control**
- **Lubrication Control**
- **Surge Control** (Through Bleed Valve)
- **Thrust Control** (Through Exhaust Nozzle)

SAMPLE CHAIN OF CONTROL (MECH.) OPERATION

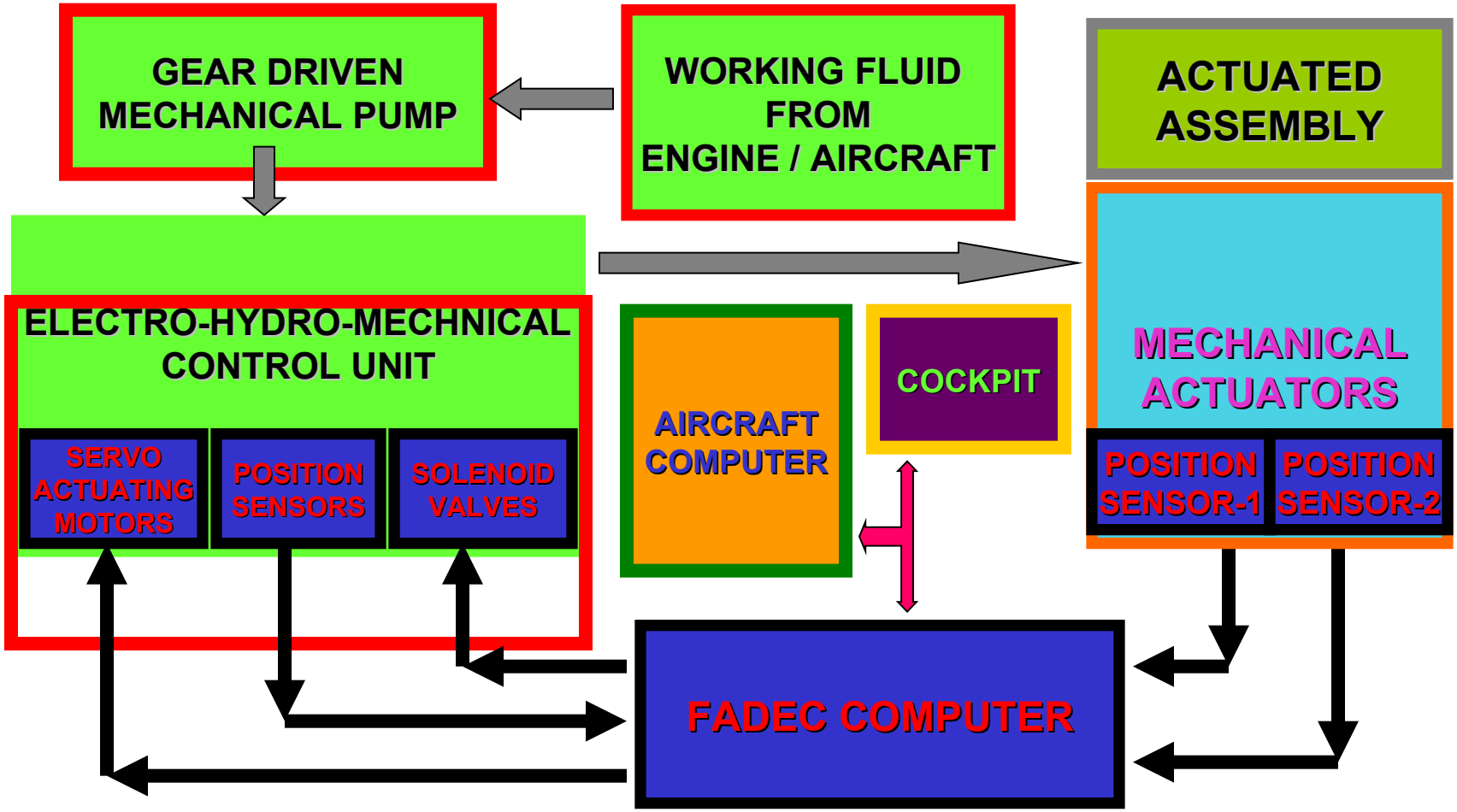

SAMPLE CHAIN OF CONTROL (ELECT.) OPERATION

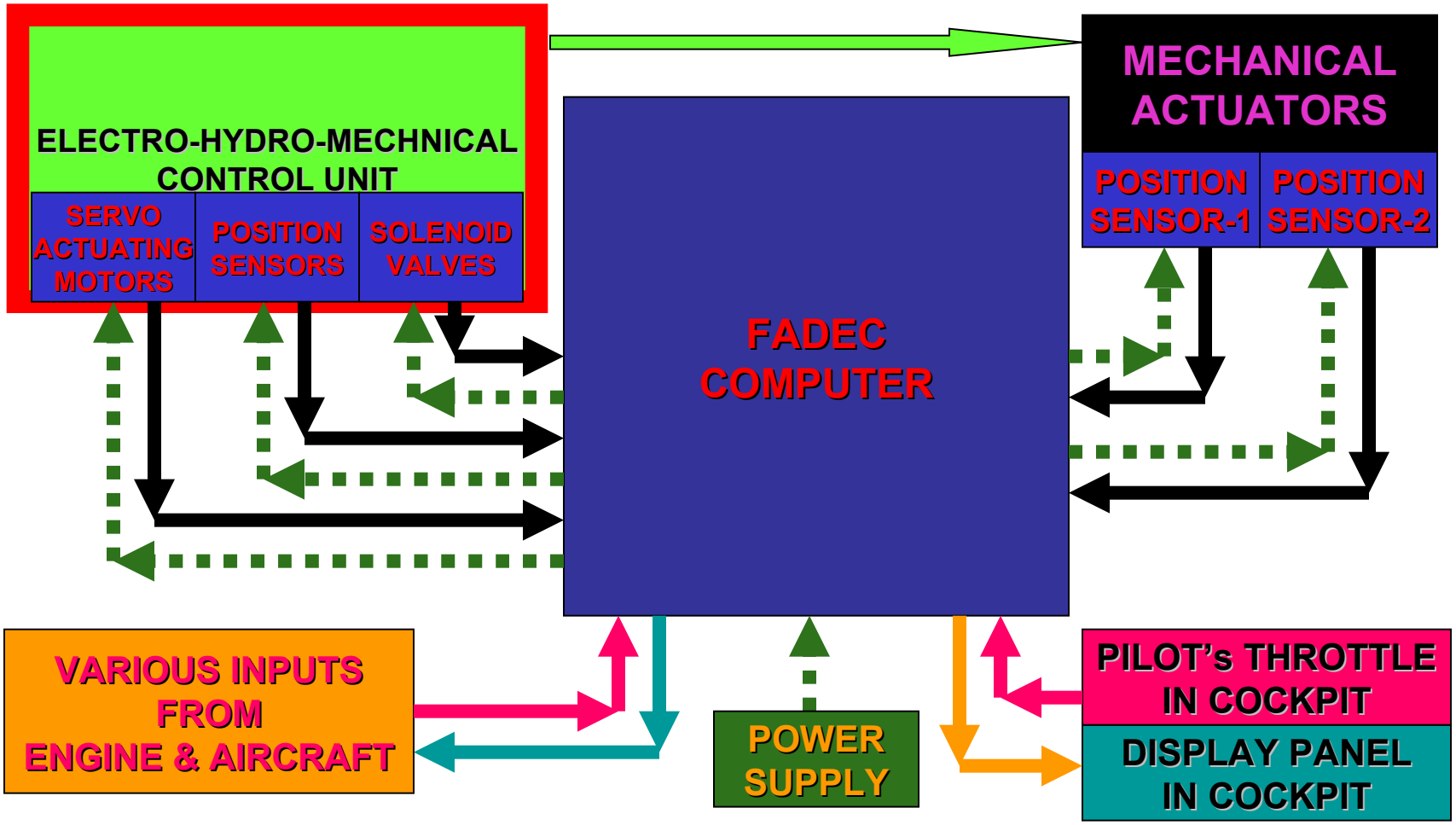

HARDWARE:

- **Dual Power Supply**
- **FADEC Computer** (With Logic Circuit PCBs & Programmed / Programmable Memory)
- **A Set of Servo Actuating Motors / Solenoid Valves / Position Sensors** (for every System Control Unit)
- **Dual Position Sensors for Actuators** (of every System)
- **A Set of Electrical Harnesses** (for every System)
- **Display Panel with Indicators / Warning Lights** (in Cockpit)
- **Multiple Engine RPM, Pressure Sensors & Thermocouples**
- **Pilot's Throttle**

SOFTWARE:

- **EPR Schedules** (For Thrust, over Entire Range of Engine Operation Without FADEC Computer Failure)

- **N Schedules** (For Thrust as per Pilot's Throttle, Engine Operation in case of Limited FADEC Computer Functionality)

Note: **In case of certain degree of FADEC failure there is an automatic mode switch-over from EPR to N rating. However, if the failure disappears, the pilot can reset the mode to switch-back to EPR mode.**

INPUTS:

From Aircraft.

- Ambient Temperature
- Altitude
- Mach Number
- Angle of Attack
- Impact Pressure
- Landing Gear Position
- Missile / Rocket Firing Signals etc.

INPUTS:

From Engine.

- Throttle Lever Position
- RPM
- Turbine Outlet / Exhaust Gas Temperature
- Exhaust Nozzle Area
- Fan Duct Flaps Position
- Bearing Temperatures
- Engine Vibration
- Engine Pressures

SIMPLIFIED FADEC ARCHITECTURE

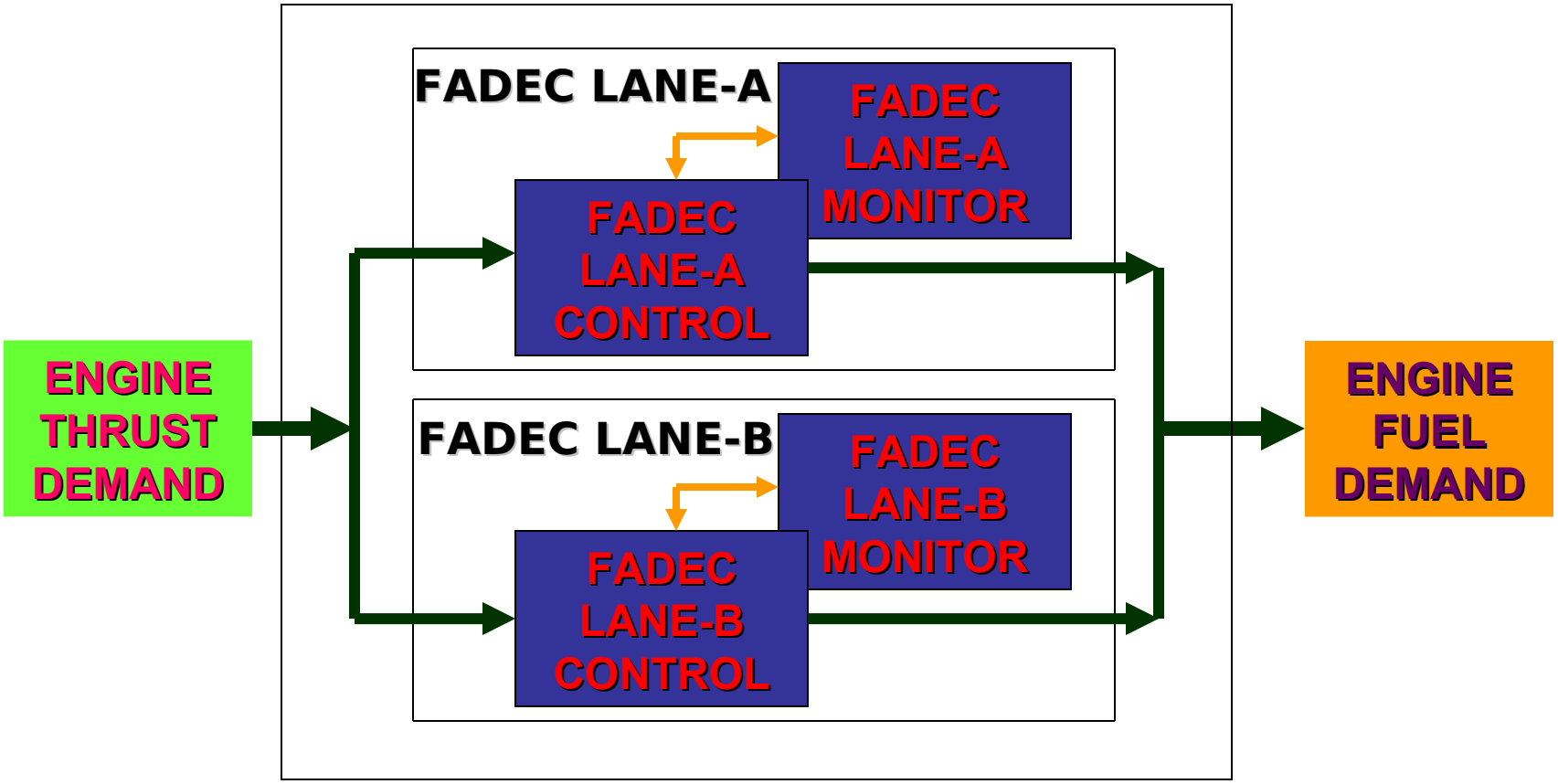

SAMPLIFIED FADEC ARCHITECHTURE

This simplified architecture is typical of many dual-channel FADECs.

There are two independent lanes: Lane A and Lane B. Each lane comprises a Command and Monitor portion, which are interconnected for cross monitoring purposes, and undertakes the task of metering the fuel flow to the engine in accordance with the necessary control laws to satisfy the flight crew thrust command.

The analysis required to decide upon the impact of certain failures in conjunction with others, requires a Markov model in order to be able to understand the dependencies.

MARKOV ANALYSIS MODEL

- By using this model the effects of interrelated failures can be examined.
- The model has a total of 16 states as shown by the number in the bottom right-hand corner of the appropriate box.
- Each box relates to the serviceability state of the Lane A Command (Ca) and Monitor (Ma) channels and Lane B Command (Cb) and Monitor (Mb) channels.
- These range from the fully serviceable state in box 1 through a series of failure conditions to the totally failed state in box 16.
- Clearly most normal operating conditions are going to be in the left-hand region of the

Model

MARKOV MODEL ANALYSIS

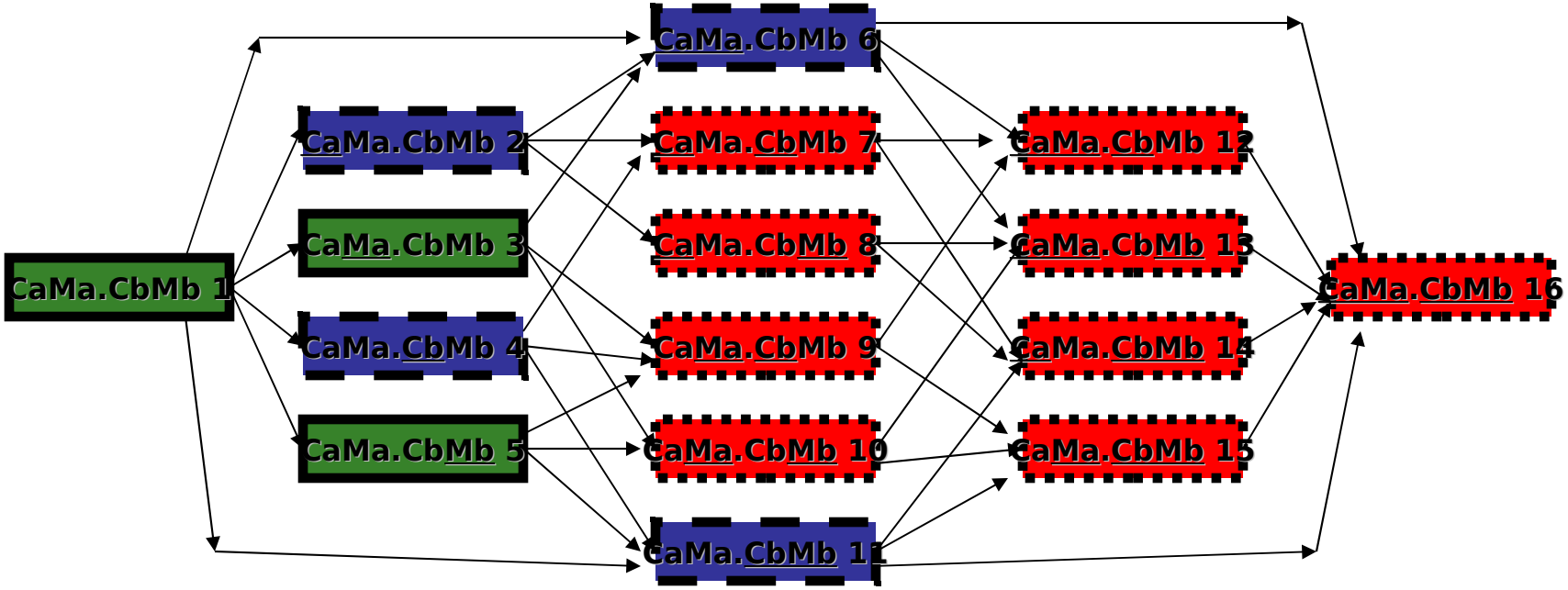

NO FAILURE → 1 FAILURE → 2 FAILURE → 3 FAILURE → 4 FAILURE

DISPACHABLE ENGINE

CONTROLLABLE ENGINE

ENGINE SHUT-DOWN

SIMPLIFIED FADEC ARCHITECHTURE

Concentrating on the left-hand side of the model it can be seen that the fully serviceable state in box 1 can migrate to any one of six states:

- Failure of Command channel A results in state 2 being reached.
- Failure of Monitor channel A results in state 3 being reached.
- Failure of Command channel B results in state 4 being reached.
- Failure of Monitor channel B results in state 5 being reached.
- Failure of the cross-monitor between Command A and Monitor A results in both being lost simultaneously and reaching state 6.
- Failure of the cross-monitor between Command B and Monitor B results in both being lost simultaneously and reaching state 11.

SIMPLIFIED FADEC ARCHITECHTURE

All of these failure states result in an engine which may still be controlled by the FADEC. However, further failures beyond this point may result in an engine which may not be controllable either because both control channels are inoperative or because the 'good' control and monitor lanes are in opposing channels or worse.

The model shown above is constructed according to the following rules: an engine may be dispatched as a 'get-you-home' measure provided that only one monitor channel has failed.

This means that states 3 and 5 are dispatchable: but not states 2, 4, 6, or 11 as subsequent failures could result in engine shut-down.